TECHNICAL DRAWING

COLLECTION: SHOWERING PACKAGES
PRODUCT CODE: TAB-1743/ALT-CP

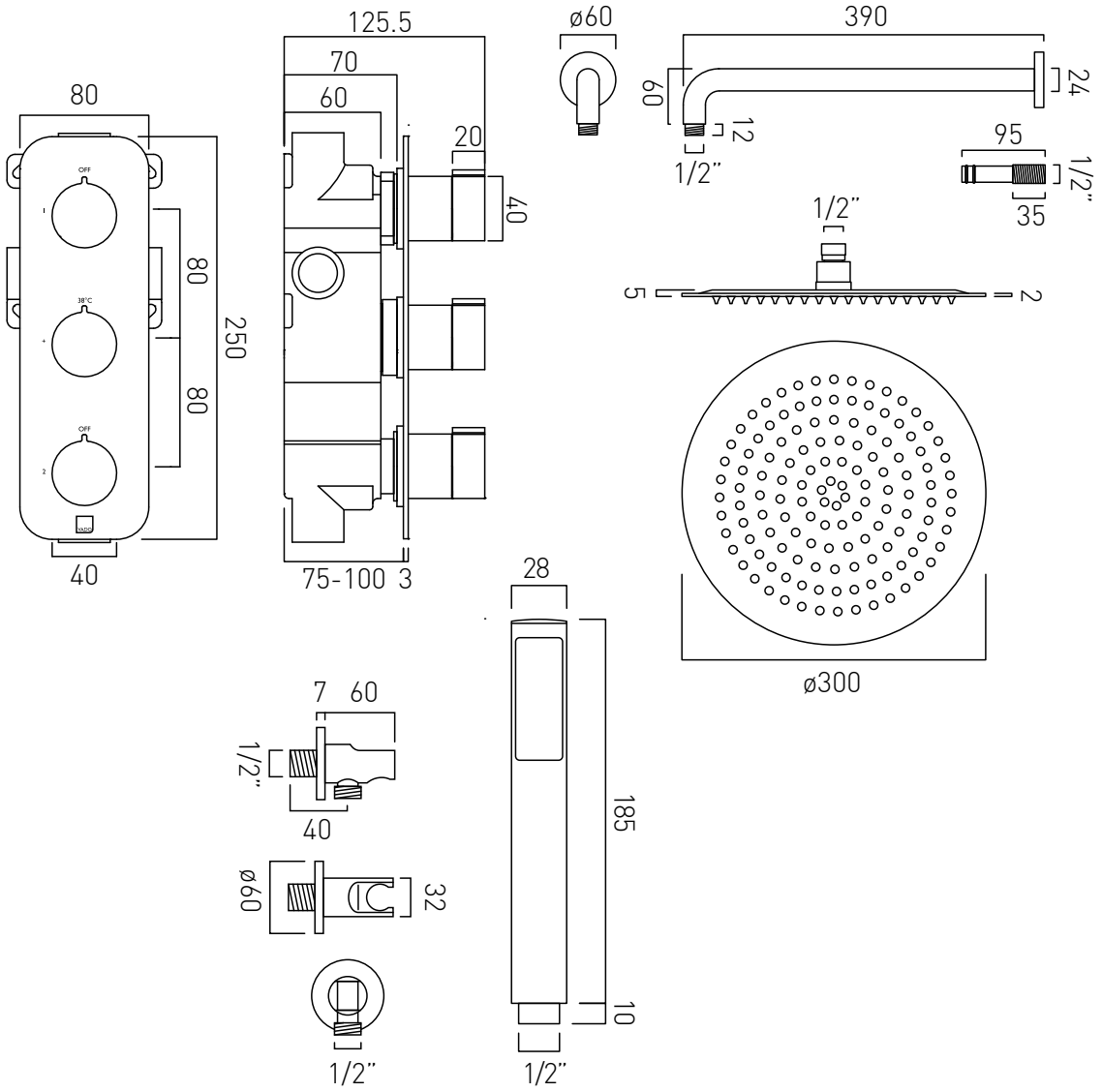

tel: 01934 744466
email: sales@vado.com
www.vado.com

where inspiration flows
taps | showering | accessories

VADO